Omegatech®

EFFICIENT ▪ EFFECTIVE ▪ ECOLOGIC

+44 (0)1823 653400
sales@omegatech.com
omegatech.com



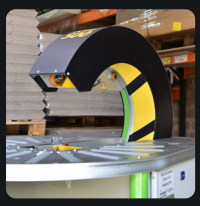

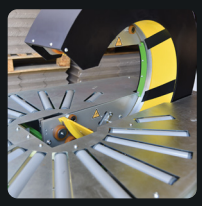

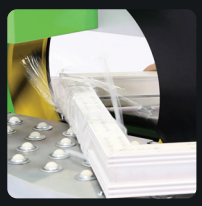









- Simple integration.
- Plug & play.
- Typically supplied from stock for immediate delivery.

Omegatech® wrapping systems deliver cost savings and ecological benefits together with significant time savings.

Omegatech® RW900 Ring Wrapping Machine Semi Automatic

The Omegatech® RW900 Ring Wrapping Machine is an advanced automatic packaging solution designed for companies that work with circular, cylindrical, or coil-based products. Engineered with industrial reliability in mind, this system provides fast, secure, and consistent wrapping using stretch film. Helping manufacturers standardise packaging, reduce waste, and optimise throughput.

- **Reduced labour time and cost.**
- **Less waste through an eco-friendly process.**
- **Significant reduction in material usage.**
- **Reduced packaging costs.**
- **Enhanced efficiency.**
- **More effective protection, reducing damages.**
- **Increased customer satisfaction.**

Equipped with adjustable roller tables, side guides, and top-press clamping, the RW900 ensures that each product is kept stable and centred during the wrapping cycle. Whether handling cable coils, tyres, rubber hoses, steel rings, or plastic piping, the RW900 is versatile enough to accommodate a wide range of product diameters and weights.

For additional performance and usability, this model includes an intuitive touch-screen control panel, allowing operators to easily configure wrapping settings and monitor machine status. Optional upgrades include extended side-rollers for larger products, braked wheels for repositioning, and full safety fencing for compliance and operator protection.

By automating the wrapping process, businesses benefit from reduced labour demands, faster production cycles, and improved packaging consistency, resulting in a stronger presentation standard and reduced film consumption.

‘Don’t take our word for it! Take a look for yourself.’

Scan the QR code to contact us for further information or to book a demonstration.
Get in touch today!

Omegatech®

EFFICIENT ▪ EFFECTIVE ▪ ECOLOGIC

+44 (0)1823 653400
sales@omegatech.com
omegatech.com

Omegatech® RW900 Ring Wrapping Machine Semi Automatic

Omegatech® RW900 Ring Wrapping Machine Semi Automatic	
Minimum inner Ø	400mm
Maximum outer Ø	1790mm
Maximum thickness	410mm
Minimum / Maximum weight	10 / 75 kg
Power supply	230V I
Engine	0,91 Kw
Manoeuvre	24V c.c.
Power consumption	0,62 Kw
Ring rotation speed	Up to 30 rpm
Pneumatic pressure	4 Bars
Compressed air consumption	7 liters/cycle
Warranty	12 Months

Omegatech Super Power 330 Spiral Wrapping Film
100mm Wide Reorder Code: OWF10 6 Rolls / Box

What our customers say:

"This was a must have machine to improve the efficiency of our packing facility and reducing the manual handling of the product. It also enables us to package the material better, which in turn should minimise the risk of damage whilst in transit."

Operations Manager
Wardrobe Manufacturer

Contact us today!

Scan the QR code to contact us for further information or to book a demonstration.

INSTALLED MACHINE SIZE

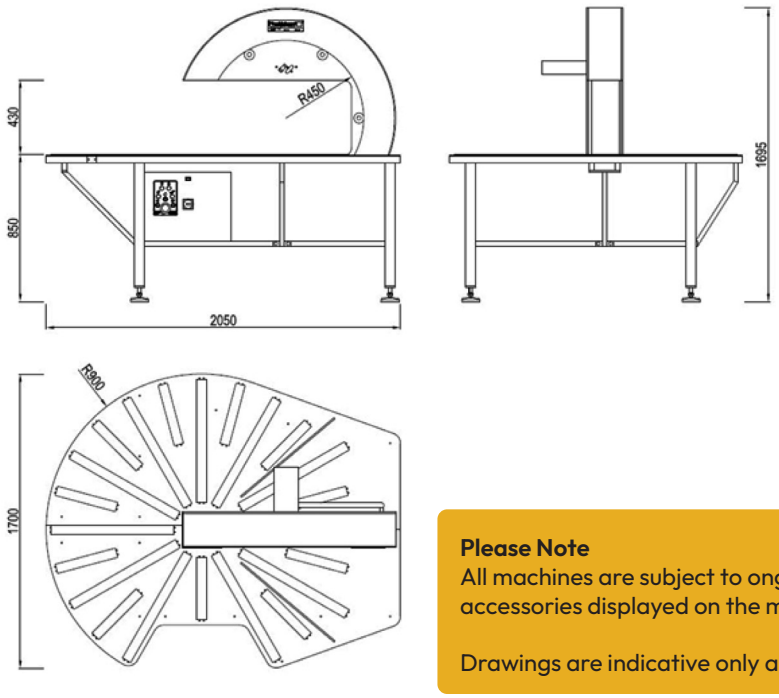

Figure 2

Please Note
All machines are subject to ongoing improvements. Some accessories displayed on the model aboe are optional extras.

Drawings are indicative only and may show or omit accessories.